Science & Global Security, 20:117–140, 2012
Copyright © Taylor & Francis Group, LLC
ISSN: 0892-9882 print / 1547-7800 online
DOI: 10.1080/08929882.2012.719383

Combining Satellite Imagery and 3D Drawing Tools for Nonproliferation Analysis: A Case Study of Pakistan's Khushab Plutonium Production Reactors

Tamara Patton

Monterey Institute of International Studies, Monterey, CA, USA

The ability to extract three-dimensional (3D) data from two-dimensional satellite images provides opportunities to apply novel geospatial techniques to problems relating to nuclear arms control, nonproliferation, and disarmament. This study demonstrates some of these techniques by estimating the plutonium production capacity of the heavy water nuclear reactors at the Khushab complex in Pakistan, where since 1998 Pakistan has produced plutonium for its nuclear arsenal. Three-dimensional analysis is used to assess the viability of using the horizontal cross-sectional area of the Khushab reactors' mechanical draft cooling towers to estimate the thermal capacity of each reactor and set an upper bound for the reactors' abilities to produce plutonium. The horizontal area approach suggests the three completed Khushab reactors have a thermal power of 40–90 MWt each. The results suggest that a horizontal area approach can be used successfully with the Khushab reactors, as well as other low power, research-type reactors employing mechanical draft cooling towers.

INTRODUCTION: 3D MODELING AND ANALYSIS

Two-dimensional aerial and satellite imagery has been an important tool for understanding nuclear programs for many decades.[1] A strictly overhead view,

Received 2 April 2012; accepted 10 July 2012.
This work was conducted at the Monterey Institute of International Studies with the Center for Nonproliferation Studies. Sincere thanks to the GeoEye Foundation for its generous support for this research and to Dr. Jeffrey Lewis for his advising and contributions.
Address correspondence to Tamara Patton, Stockholm International Peace Research Institute, Signalistgatan 9, SE-169 70, Solna, Sweden. E-mail: patton@sipri.org

however, can be limiting in terms of object characterization and capability estimation. A 3D view of a complex, on the other hand, allows analysts to estimate other parameters such as height, volume, depth, and even air flow patterns.

Although 3D or stereo imagery is available for certain areas of the world, working with such imagery can be a difficult endeavor, requiring advanced imagery analysis software. A simpler and more straightforward method involves constructing 3D models using Google SketchUp, a digital 3D modeling program that allows a user to build a model directly onto commonly available 2D satellite imagery such as high-resolution GeoEye satellite imagery. Imagery analysis programs ENVI 4.8 and Google Earth can be used to extract 3D data from these images.

In this article, two different methods are used to obtain the height dimensions of structures from 2D images. The first method involves using the angle of the altitude of the sun at the particular date and time the image was captured, as well as the measured lengths of shadows cast by the structures.[2] The basic trigonometric equation is:

$$\mathrm{h} = \tan(\alpha)s$$

Where $\mathbf{h}$ = height of the structure

$\boldsymbol{\alpha}$ = the angle of the altitude of the sun (obtained from image metadata)

$\mathbf{S}$ = length of structure's shadow (measured in ENVI or Google Earth)

The careful placement of rulers in making shadow measurements was supported by sun azimuth information (the angle of the sun along the horizon) provided in the satellite image metadata. Knowing this degree angle enabled more accurate measurements as the ruler lines could be placed to match the exact azimuth degree angle when the image was captured.

A second method used in the height estimation process was a shadow matching technique in Google SketchUp. Heights of structures are estimated by matching simulated shadows cast by figures created in Google SketchUp to the shadows on an imported satellite image plane from Google Earth. As the images contain real terrain data, they allow the modeler greater accuracy in taking into account terrain contours and ground settling. This technique extends the purpose of the 3D models beyond visualization to obtain key height dimensions involved in structure characterization.

These methods are used to study satellite imagery of Pakistan's Khushab nuclear complex, which as of 2012 contains three nuclear reactors with a fourth under construction.

Khushab Reactor Design

Declassified U.S. intelligence reports indicate that the original design of the first reactor is based on the 40 MWt Canadian-designed NRX reactor.[3] The NRX is suitable for plutonium production given its relatively high neutron

flux levels among reactors operating at similar powers and its reliability as one of the longest operating research reactors in the world.[4] India and Taiwan both used NRX-type reactors in their respective nuclear weapons programs.[5] When South Korea initiated a nuclear weapons program in 1976, it sought to purchase an NRX reactor from Canada.[6]

Differences in the shape, size, and layout between the first Khushab reactor (Khushab I) and the second and third reactors (Khushab II and III, which appear similar to each other) have produced vigorous public debate over the possible capacity of the second and third reactor. Independent experts initially asserted that the reactor might be as large as 1000 MWt.[7] Later, U.S. officials and other experts disputed that estimate, suggesting that the second reactor would be an order of magnitude smaller, approximately 40–100 MWt.[8] As of 2008, the high estimate has been reduced to 100 MWt or more.[9] This debate centered on specifications of the reactor vessel or calandria and whether or not this structure was visible and measurable in overhead satellite images.

Due to the uncertainty surrounding the visibility of the calandria in publicly available satellite imagery, this article focuses on the more clearly visible reactor mechanical draft cooling towers, taking a 3D view of various components. In particular, this study evaluates the notion that the horizontal cross-sectional area of a mechanical draft cooling tower can indicate the thermal capacity of a reactor. The horizontal area approach is evaluated both with respect to the Khushab reactors as well as other reactors possessing mechanical draft cooling towers.

Building Volume

In assessing the possibility that the design of Khushab II is a close replica of Khushab I, a preliminary consideration is the use of space for the main reactor base building and central reactor hall. While area comparisons of the reactors have been made in the past, the 3D modeling process revealed that the reactors are also fairly similar in height and volume as well (Figures 1 and 2 and Table 1).

As the main building complex of Khushab II and III are of the same design, the only notable difference is the smaller base building used for Khushab I, contributing a total volume difference of 17,365 m^3 between Khushab I and Khushab II and III. However, the Khushab I reactor base building is connected to a large appendage building by a hall to its west which could also likely house infrastructure to support reactor operations, diminishing the possible significance of this volume difference.

While building size is typically not a reliable indicator of reactor capacity, it is worth taking into account that despite the major aesthetic changes from Khushab I to Khushab II and III, there is no significant change in the use of

Table 1: Volume comparison of the Khushab reactor base buildings and central halls

	Khushab I	Khushab II and III
Reactor hall volume ($m^{3)}$	32955	31450
Reactor building base volume (m^3)	48330	67200
Total volume (m^3)	81285	98650

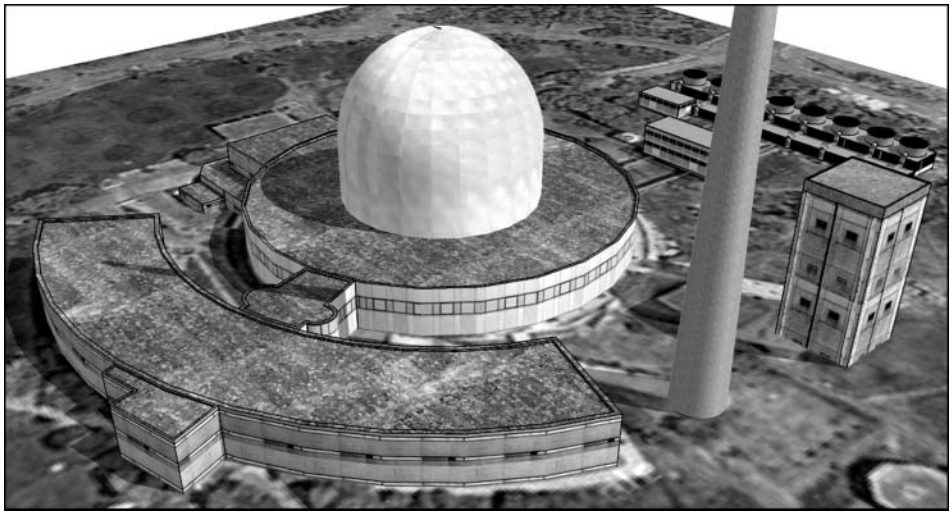

Figure 1: Khushab I reactor (created in Google SketchUp).

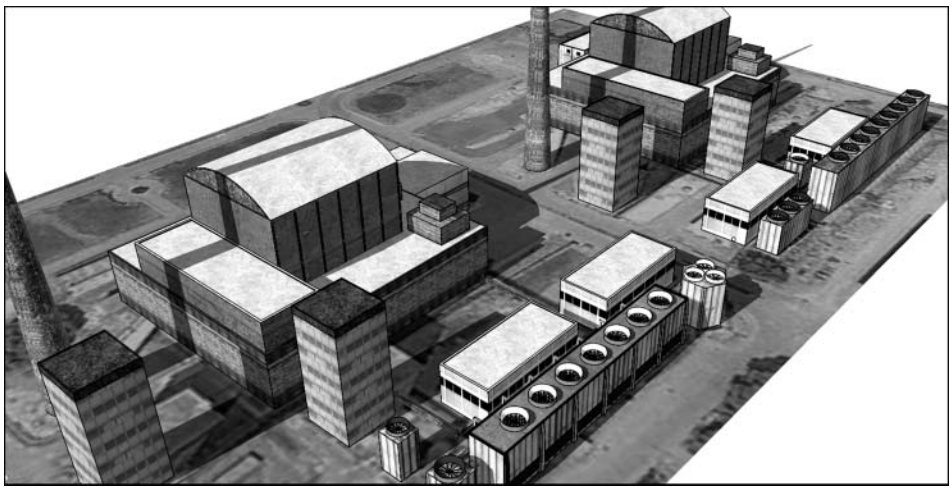

Figure 2: Khushab II and III reactors (created in Google SketchUp).

space for the main building of each reactor. It is also worth noting that India made similar aesthetic changes when it constructed the indigenous Dhruva reactor next to the foreign supplied CIRUS reactor.

Cooling Tower Analysis and the Horizontal Area Approach

Unlike building size, the size of the reactors' cooling towers is a useful proxy for measuring the thermal capacity of the Khushab reactors. While cooling towers may not precisely reveal the thermal power of a reactor (engineers commonly over-design cooling towers and keep part of the capacity in reserve), cooling towers do represent an upper bound on the thermal capacity of the reactor.

Many features important for determining the capacity of cooling towers cannot be observed in imagery. As a result, estimates of thermal capacity from the dimensions of cooling towers can only be approximate estimations. However, measurements of cooling infrastructure components in three dimensions from available satellite imagery can generate upper bounds and, in cases where reactor construction follows standard engineering practices, suggest reasonable estimates for normal operations.

This analysis will focus on the evaluation of an estimation method mentioned by Thomas Cochran in his 2006 analysis of Khushab II.[10] The estimate states that a mechanical draft cooling tower can dissipate roughly 80,000 to 100,000 kcal/m^2-hr.[11] In this case, the square meters refer to the horizontal cross-sectional area of the packing or fill of a cooling tower. Using this horizontal area approach, each square meter of the top of a cooling tower represents approximately 0.093–0.116 MWt of reactor thermal output. The parties to the initial dispute over the capacity of the second Khushab reactor—which occurred before the construction of the cooling towers—identified this method as a possible way to settle the dispute. That exercise is conducted here, both with respect to the cooling towers at Khushab as well as other similar towers for other nuclear reactors.

A combination of commercial satellite imagery and 3D modeling produces three conclusions regarding the horizontal area approach. Each is treated in detail in subsequent sections.

1. The horizontal area approach is most reliable with cooling towers of counterflow configuration rather than crossflow configuration due to the placement of the fill in each type. For smaller crossflow towers roughly less than 8 m in height, the horizontal area approach may still be accurate if the ratio of width to height is close to 3:2.
   Estimation Technique: Counterflow or crossflow configuration can be reasonably inferred from a combination of piping configuration, height estimate, and fan size information.

2. The horizontal area approach is likely to perform better with towers of film fill type rather than splash fill type due to film fill's more compact nature and less varied height range.
   Estimation Technique: Fill type may be reasonably inferred from the estimated height of the cooling tower in combination with other known design parameters.

3. The horizontal area approach performs better for smaller research-type reactors than for larger nuclear power reactors given that heat-load is the major determining factor for the size of a small research-type reactor. In this study, the horizontal area approach was shown to perform well with reactors 100 MWt or less.
   Estimation Technique: Fan size of the cooling tower can be a rough indicator of whether the reactor is of low power or high power.

The estimation techniques indicate that the Khushab I reactor likely possesses a crossflow cooling tower, while Khushab II and III possess counterflow towers. Height estimates indicate that all of the reactors most likely employ film fill. The dimensions of the Khushab towers suggest all three are small mechanical draft cooling towers designed for research-type reactors. Overall, this is very nearly an ideal case to use the horizontal area approach.

The Khushab Fleet and the Horizontal Area Approach

Figure 3 shows how the horizontal area approach was applied to the Khushab reactors. The cross-sectional area of Khushab I's eight fan mechanical draft cooling tower is 464 m^2. Using the horizontal area approach, this suggests a maximum thermal capacity range of 43–54 MWt for the reactor. This fits with the reported capacity of NRX, especially if Pakistani engineers slightly over-sized the cooling towers for safety and flexibility.

Khushab II also has an eight fan mechanical draft cooling tower, but the overall cooling system is significantly larger. The main cooling tower is longer and taller, and there are also several additional cooling units located directly to the north and south of the main tower. The main cooling tower possesses an area of 520 m^2, the three-fan unit to the north adds an area of 65 m^2, and the two single fan units in the south add an additional area of 43 m^2. The total area of 628 m^2 implies a reactor capacity of 58–73 MWt.

The cooling towers for Khushab III also differ from those at Khushab I and II. The main cooling tower is 600 m^2, and possesses ten fans instead of eight. Additional units to the south and west of the tower yield a total cooling area of 772 m^2, which suggests an upper bound of 72–90 MWt.

From Khushab I to Khushab III, Pakistani engineers significantly altered both the size and design of the cooling towers. Most importantly, the use of the horizontal area approach indicates that Pakistan steadily increased the

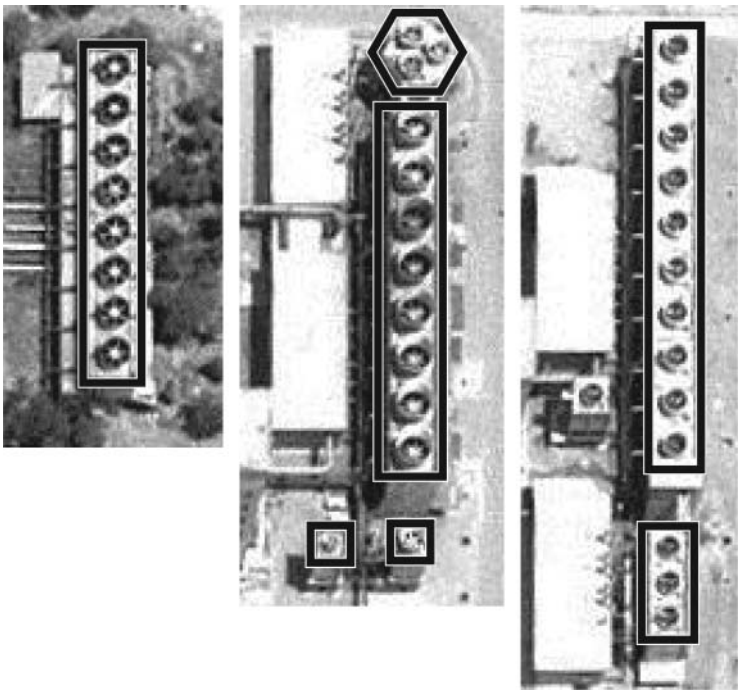

Figure 3: Horizontal area of Khushab cooling towers (Note: Figures are not equally scaled in this image). Satellite images courtesy of GeoEye.

capacity of each set of cooling towers. The changes could reflect either an increasing capacity of the reactors, or they may merely reflect a learning process as engineers improve an indigenously designed reactor and refine cooling needs.

Nevertheless, the capacity ranges given in Table 2 represent maximum capacity estimates for these reactors. The following three sections examine some fundamental variables of cooling tower construction in order to assess the reliability of the ranges in Table 2. Each section attempts to define the limits to the horizontal area approach as employed here.

Table 2: Thermal capacity of Khushab reactors from cooling towers

Reactor	Total horizontal area of cooling tower fill (m^2)	Maximum capacity range using horizontal area approach (MWt)
Khushab I	464	43–54
Khushab II	628	58–73
Khushab III	772	72–90

Tower Type: Counterflow vs. Crossflow

The notion that the horizontal area of a cooling tower can be used to infer reactor thermal capacity depends in part on the configuration of the "fill" in a cooling tower. Inside a cooling tower, the flow of water is disrupted by a material, called fill, to increase the surface area of the water in contact with air, allowing the air flow to more efficiently remove heat from the water. One may configure the flow of water and air across the fill material in two ways: (1) "crossflow" in which the air flows perpendicular, or across, the flow of water or (2) "counterflow" in which the water is sprayed in the opposite direction, or counter to, the flow of air.

The horizontal area approach is likely to be most effective with towers of a counterflow configuration rather than a crossflow. As shown in Figure 4, the layers of fill in a cross-flow configuration extend from nearly the top of the tower to the bottom, with gaps directly underneath the fans to create an upward draft. This makes the height of a crossflow tower a relatively more important factor that is not captured by the horizontal area approach, and the gaps underneath the fan further distort the measurement. Conversely, as shown in Figure 5, in counterflow towers the fill occupies a relatively compact area and is continuous throughout the length of the tower. Partitions for the cells are typically only made from the top of the fill to the base of the fan deck to prevent air being induced downward through an inoperative fan if the tower is in partial operation.[12] Furthermore counterflow fill tends to be of a uniform depth, so it is not particularly sensitive to tower height.

Therefore, the horizontal area approach using the cross-sectional area of the fill as measure from an overhead view is likely to yield a reasonable

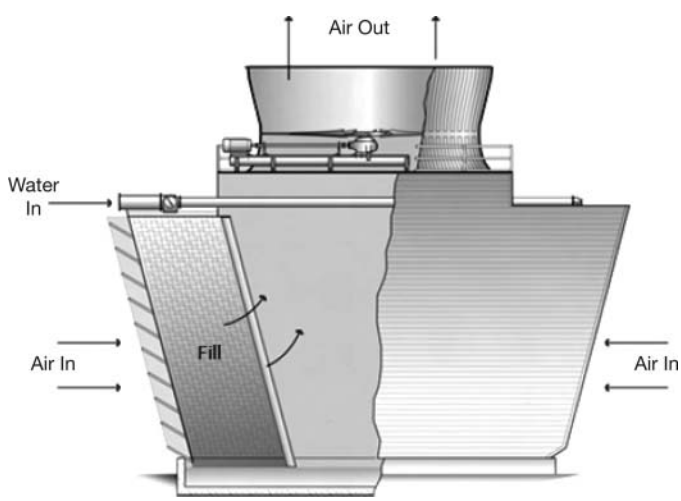

Figure 4: Induced draft, double-flow, crossflow tower. Source: John Hensley, *Cooling Tower Fundamentals* (Overland Park, KS: SPX Cooling Technologies, Inc., 2009), <http://spxcooling.com/pdf/Cooling-Tower-Fundamentals.pdf>, 10.

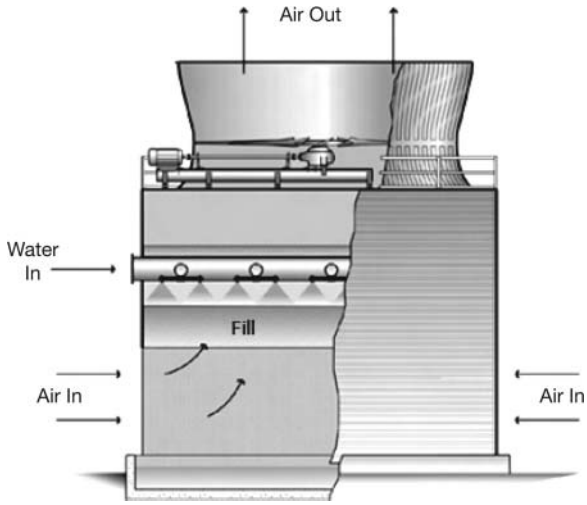

Figure 5: Induced draft counterflow tower. Source: John Hensley, *Cooling Tower Fundamentals* (Overland Park, KS: SPX Cooling Technologies, Inc., 2009), <http://spxcooling.com/pdf/Cooling-Tower-Fundamentals.pdf>, 10.

result for counterflow towers. This method is less likely to yield a reliable capacity estimate for crossflow towers, unless the height of the tower happens to compensate for the fill gap underneath the fan (demonstrated in Figure 8).

There are two methods to determine whether the Khushab cooling towers are of the crossflow or counterflow type. The first involves looking at piping configuration, and the second is a height range analysis.

The placement of pipes leading into the cooling tower may indicate the tower's configuration through the placement of pipes carrying hot water flowing into the cooling tower. Crossflow towers create water flow by using gravity, pumping water into the top of the tower and allowing it to fall down the tall, vertical fill surface which extends from the top of the tower to nearly the bottom. Hot water would enter the cooling tower from the very top through pipes that run along the surface of the tower, or feed into the tower very near the fan deck (Figure 4).[13]

In counterflow towers (Figure 5), the fill is located below a drift eliminator section (used to keep liquid water in the circulating system), as well as a spray nozzle configuration which is used to distribute the water evenly across the fill in fine droplets. Hot water should therefore enter at the level of the spray nozzles, below the fan supports and drift eliminator section. Given this configuration, pipes carrying hot water would enter a counterflow tower below where they might enter a crossflow tower.[14] The hot water pipes of the Khushab I cooling tower appears to enter the tower from the top, indicating a possible crossflow tower (Figure 6). For Khushab II and III towers, however, the hot water appears to enter from the side, indicating possible counterflow towers (Figure 7).

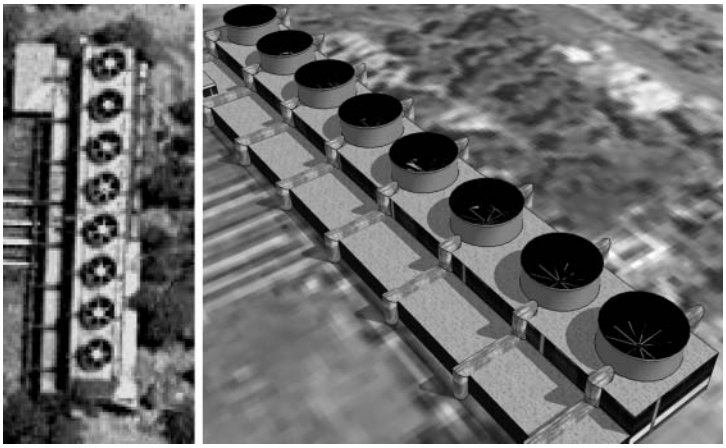

Figure 6: (Left) GeoEye image of Khushab I cooling towers. (Right) 3D model detailing the Khushab I crossflow piping configuration (created in Google SketchUp).

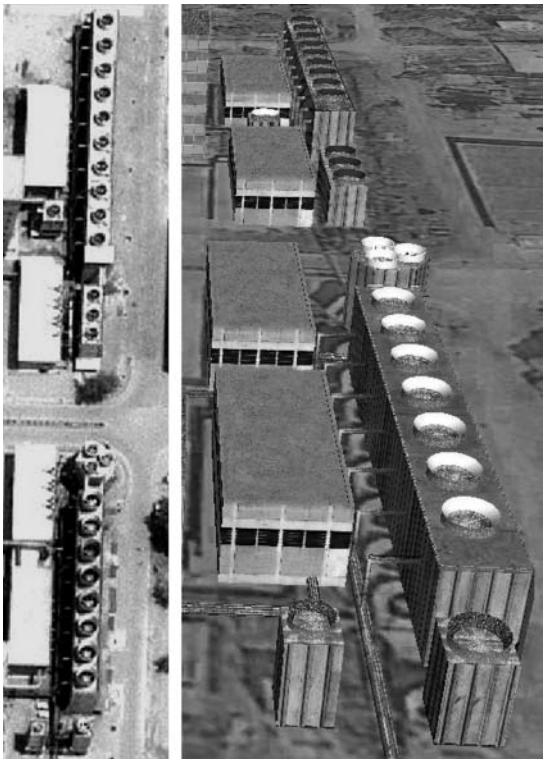

Figure 7: (Left) GeoEye image of Khushab II and III cooling towers. (Right) 3D model detailing the Khushab II and III crossflow piping configuration (created in Google SketchUp).

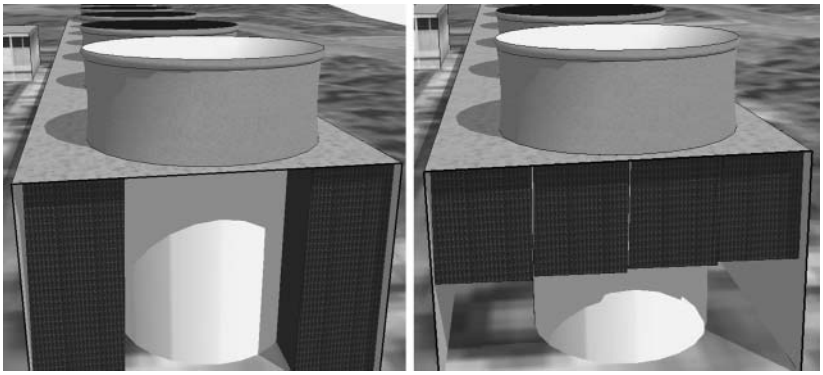

Figure 8: Khushab I fill and the horizontal area approach (created in Google SketchUp).

A second method of indicating tower type (crossflow or counterflow) is height. Although one might expect crossflow towers to be taller, as they rely on gravity for water flow, this is typically true only for relatively large reactors for electricity generation. In the case of smaller cooling towers for research-type reactors like those at Khushab, a counterflow tower's use of high-pressure spray systems may result in a significantly taller structure than a crossflow tower of similar capacity.[15]

Therefore, in the case of the Khushab complex, one would expect that a counterflow tower would be taller than a crossflow tower. Comparing the heights of the three sets of cooling towers appears to confirm this observation (Table 3). Khushab I, with hot water inlets located at the top of the tower, is approximately 6 m shorter than the towers of Khushab II and III with side hot water inlets. It seems probable, then, that the cooling tower for Khushab I is a crossflow type tower, while Khushab II and III are outfitted with counterflow type towers.

With the Khushab II and III cooling towers assessed as probable counterflow type towers, we may be relatively confident in estimating their capacity with the horizontal area approach. In the case of Khushab I, estimates from cross-sectional area may also be used. Figure 8 suggests why this may be the

Table 3: Estimated heights of Khushab cooling towers

Reactor	Estimated total height of cooling tower (m)	Total cross sectional area of cooling tower fill (m^2)	Maximum capacity range using horizontal area approach (MWt)
Khushab I	5	464	43–54
Khushab II	11	628	58–73
Khushab III	13	772	72–90

case. The height of the Khushab I cooling tower is approximately 5 m, leaving a possible fill height of about 3–4 meters that runs nearly the height of the tower. If one were to imagine cutting this fill material into two layers and arranging the blocks as in a counterflow configuration, one can quickly see that the volume of fill is essentially the same. This roughly explains why horizontal area approach happens to correctly estimate the size of Khushab I against reported estimates despite its unsuitable cooling tower configuration. This is likely a unique case that we could not expect to hold true for larger crossflow cooling towers.

Fill Type: Film Fill vs. Splash Fill

Another important parameter is the type of fill used within the cooling tower. The two primary types of fill are *splash* and *film* (Figure 9). Splash fill is usually a relatively tall and open framework of horizontal bars, where water is splashed from above onto the successive bars to form smaller droplets, and the surface area of the water droplets becomes the surface area for heat exchange with the air. This fill type is typically used in cases where there may be a significant amount of debris in the water, or if the towers are in a location especially vulnerable to algae growth. Film fill, on the other hand, has become the more commonly used type of fill and comprises thin corrugated layers across which water spreads in thin sheets. Film fill is significantly more compact than splash fill and can accomplish the same amount of cooling in a

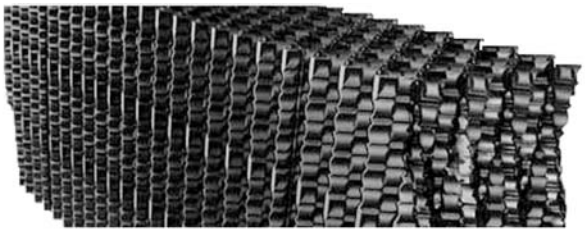

(a)

(b)

Figure 9: (a) Film fill and (b) splash fill.

Table 4: Film fill height vs. splash fill height

	Splash fill	Film fill	Low clog film fill
Fill height required (m)	5–10	1.2–1.5	1.5–1.8
Effective heat exchange area ($m^2/m^{3)}$	30–45	150	85–100
Pumping head requirement (m)	9–12	5–8	6–9

Note. *Energy Efficiency Guide for Industry in Asia,* (United Nations Environment Programme, 2006) www.retscreen.net/fichier.php/898/Chapter-Cooling Towers.pdf. Contents presented by the United Nations Environment Programme, 2006.

significantly smaller space. Film fill towers therefore tend to be more compact. The horizontal area approach is likely to be more effective on towers possessing film fill rather than splash fill. Again, tower height can help distinguish the tower between the two types if an analyst is aware of other some design parameters such as probable thermal capacity, fan size, and likely configuration type (crossflow or counterflow).

The height ranges in Table 4 evidence why the horizontal area approach would be more effective with film fill cooling towers. The much lower height range of 1.2–1.5 meters for film fill limits the significance of the absent height dimension of the horizontal area approach, as simple length and width capture the most substantial dimensions of the fill.

Based on 3D analysis and available information on fill height ranges, the Khushab towers are determined to be film fill towers, further supporting the thermal capacity ranges given by the horizontal area approach in Table 2. Table 3 shows the inferred dimensions of the three main cooling towers for each of the Khushab reactors, and Table 4 illustrates the parameters for each of the different types of fill. As a splash fill tower would require 5–10 m of just fill alone, it is less likely that the Khushab cooling towers are of this type, with the tower heights ranging from 5–13 m. Besides fill, other elements that would contribute to the total cooling tower height might include fan supports, drift eliminators, spray nozzles, spray distribution zone, air inlet grills, a cold water basin, and a grid lift to improve air distribution.[16] It is therefore much more likely that the Khushab towers employ film fill due to its more compact height requirement range of 1.2 to 1.5 meters.

Reactor Operation: Research-Type Reactors vs. Nuclear Power Reactors

This section demonstrates how the horizontal area approach performs better with smaller research-type reactors than with larger electricity producing reactors. It also demonstrates that fan size can indicate the suitability of the horizontal area approach.

The horizontal area approach performs better with cooling towers for research-type reactors because of a balance of four basic thermal performance parameters, including *heat load, range, approach*, and *wet-bulb temperature*.[17] While tower size varies linearly with heat load (larger towers can carry a larger heat load), tower size varies *inversely* with range, approach, and wet-bulb temperature (i.e., a larger range, a larger approach, and a lower wet-bulb temperature will result in reductions to the size of the tower).[18]

One important factor that must be considered in assessing the validity of results provided by the horizontal area estimate is climate. Due to the fact that wet cooling towers rely primarily on evaporation, their capabilities (and therefore sizing) can be greatly affected by the temperature and humidity of the surrounding atmosphere. The towers will function most efficiently in environments where the relative humidity is low and the surrounding atmosphere can more rapidly accommodate evaporative heat loss.[19] The measurement that most greatly affects tower size is called the "approach." This is the difference between the temperature of the water exiting the cooling tower and the ambient wet bulb temperature which measures the ambient air temperature (also referred to as the "dry bulb" temperature) and the relative humidity of the surrounding atmosphere. All of these factors can affect the approach and tower size, and should therefore be considered when analyzing the difference between results of the horizontal area approach and previous estimates.

As we consider larger and larger reactors, at some point factors like range and approach offset heat load, and larger reactors may no longer require larger cooling towers. Therefore, the horizontal area approach would be most accurate before this point, when tower size is more directly linked to heat load, and therefore when tower size would more accurately reflect reactor thermal capacity.

Supporting this notion, Tables 5 and 6 demonstrate how well the horizontal area approach predicts the reported thermal capacity of various reactors. For relatively small research reactors, the horizontal area approach performs very well against reported capacity estimates. The estimate holds well with Pakistan's Khushab I, PARR-1, Russia's PIK reactor, Iran's IR-40 reactor, and even with reported estimates of Israel's Dimona reactor.

The one serious discrepancy is interesting. Using the horizontal area approach, Algeria's Es-Salam reactor would appear capable to operations up to 48–60 MWt. Although Algerian authorities have stated that the reactor is considerably smaller, the heavily overdesigned cooling system was a key factor in concerns in 1991 over Algeria's construction of the reactor outside of the IAEA safeguards system.[20] Even after Algeria indicated that the reactor would be placed under safeguards, the U.S. intelligence community indicated that it was still "seeking to acquire details on why a 15 MW reactor would require such apparently large cooling towers."[21]

Table 5: Using the horizontal area approach with research-type reactors with mechanical draft cooling towers

Reactor and country	Horizontal area of cooling tower fill[1] (m^2)	Current reported capacity estimate[2] (MWt)	Maximum capacity range using the horizontal area approach (MWt)
Khushab I (Pakistan)	464	40[3]	43–54
PARR-1 (Pakistan)	125	10	12–15
PIK (Russia)	924	100	86–107
IR-40 (Iran)	451	40[4]	42–52
Dimona (Israel)	450	40–70[5]	42–52
Es-Salam (Algeria)	513	15	48–60

[1]Combines multiple cooling towers and independent fans.

[2]International Atomic Energy Agency, "Research Reactor Database," <http://nucleus.iaea.org/RRDB>.

[3]Central Intelligence Agency, "Pakistan: A New Reactor Under Construction." Released September 1999; Central Intelligence Agency, "Pakistan's Nuclear Weapons Program: Personnel and Organizations." Released September 1999; E. A. G. Larson, *A General Description of the NRX Reactor* (Ontario: Atomic Energy of Canada Limited, 1961), <http://fissilematerials.org/library/lar61.pdf>, 1.

[4]International Atomic Energy Agency, "GOV/2003/40 - Implementation of the NPT safeguards agreement in the Islamic Republic of Iran." Last modified 6 June 2003, <http://www.iaea.org/Publications/Documents/Board/2003/gov2003–40.pdf>.

[5]D. Albright, F. Berkhout, and W. Walker, *Plutonium and Highly Enriched Uranium 1996 World Inventories, Capabilities and Policies* (New York: Oxford University Press, 1997), 262.

One possible explanation is that the Algerian cooling towers employ splash-type fill, which has less cooling capacity per cubic meter than the typically used film fill, and would therefore require larger towers. However, the towers' shadows indicate that they are approximately 13 m tall which is still very large for a reactor of such low power. Such a height could indicate a

Table 6: Failure of horizontal area approach to accurately reflect thermal capacities of nuclear power reactors with mechanical draft cooling towers

Reactor and country	Total horizontal area of cooling tower fill[1] (m^2)	Reported thermal capacity[2] (MWt)	Maximum capacity range using the horizontal area approach (MWt)
Duane Arnold (United States)	5323	1912	495–617
Neckarwestheim-1 (Germany)	7896	2497	734–916
Chinon B-1 (France)	14090	2785	1310–1634
Edwin Hatch (United States)	18780	2804	1746–2178

[1]Combines multiple cooling towers and independent fan units.

[2]International Atomic Energy Agency, "Power Reactor Information System." Last modified 19 March 2012, <http://pris.iaea.org/Public/CountryStatistics/ReactorDetails.aspx?current= 8>.

counterflow configuration, which would support the results of the horizontal area approach in this case, though greater accuracy would be achieved for film fill versus splash fill. Splash fill is typically only used in cases where incoming water is likely to have significant amounts of debris or when the tower is especially vulnerable to algae growth. As Algeria's needs to accommodate these factors are not immediately apparent, this case remains an interesting one.

In short, the method described by the horizontal area approach appears to generally agree with the reported thermal output estimates for the majority of research-type reactors with mechanical draft cooling systems with the sole exception of a very interesting case. As expected, the estimates tend to be slightly higher than reported capacity estimates. In the one case of a significant discrepancy, important questions remain with regard to why Algeria severely over-designed its cooling towers. The horizontal area approach may yet tell us something important about Algeria's nuclear reactor program. In every low-power reactor case examined, the horizontal area approach accurately provides an upper bound for thermal capacity, though the results for each case could be further tested through methods similar to those detailed in this study for Khushab.

It is important to note that this method appears to work well only for smaller reactors. The estimate fails to accurately reflect the reported capacity estimates for larger nuclear power reactors (Table 6). This is likely due to larger ranges and approaches offsetting the cooling tower size, as well as other efficiency measures stepping in to allow a greater cooling capability with less site area impact.[22]

While not definitive, the fans of a cooling tower may help suggest whether the horizontal area approach is likely to produce a reasonable thermal capacity estimate. Mechanical draught cooling towers are limited by the capacity of their fans.[23] Table 7 shows a positive correlation between fan diameter and thermal capacity, while the number of fans can compensate for a small diameter and vice versa. In analyzing a mechanical draft cooling tower, this method may enable quick characterization of the tower to guide further investigation.

General Height Considerations

As far as a direct translation to thermal output, cooling tower height is essentially useless given that minor height differences among towers of a certain category or type are more likely to indicate differences in supplemental structures such as fan supports or grid lifts rather than key parameters such as fill type. This can be seen in a comparison of Khushab I and Iran's IR-40 reactor in Table 8. Both reactors are reported to be around 40 MWt. The IR-40 cooling tower, however, is significantly taller and larger in volume, but the horizontal area approach suggests that the estimated thermal output of the reactor is probably less than that of Khushab I. The IR-40 cooling tower has

Table 7: Fan size and number as a reflection of thermal capacity

Reactor	Fan diameter (m)	Number of fans	Thermal capacity (MWt)
PARR-1	1.5	14	10
Es-Salam	4	6	15
Khushab I	4.4	8	40
IR-40	5.4	4	40
Dimona	6.5	2	40–70
PIK	5.5	6	100
Duane Arnold	8	24	1912
Neckarwestheim-1	9	33	2497
Chinon B-1	12	18	2785
Edwin Hatch	8.5	86	2804

a side entry piping configuration and medium height that are characteristic of the counterflow configuration with film fill that is optimal for horizontal area analysis.

It is important to keep in mind that height, even if useless for directly determining thermal capacity, can still provide important information about fill type or water and air flow configuration that can aid in determining the applicability of the horizontal area approach.

Error Analysis

There are several sources of error for any measurements derived from satellite imagery which can limit accurate characterization of cooling towers. These include problems in measuring shadows from the images and the possibility of additional cooling systems beyond the cooling towers.

Table 8: Volume of cooling tower in relation to thermal capacity

	Horizontal area of cooling tower (m^2)	Estimated height of cooling tower (m)	Volume of cooling (m^3)	Reported capacity of reactor (MWt)	Estimated capacity of using horizontal area approach (MWt)
Khushab I	464 (58m, 8m)	5	2320	40[1]	43–54
IR-40	451 (41m, 11m)	8	3608	40[2]	42–52

[1]Central Intelligence Agency, "Pakistan: A New Reactor Under Construction." Released September 1999; Central Intelligence Agency, "Pakistan's Nuclear Weapons Program: Personnel and Organizations." Released September 1999; E. A. G. Larson, *A General Description of the NRX Reactor*, (Ontario: Atomic Energy of Canada Limited, 1961), <http://fissilematerials.org/library/lar61.pdf>, 1.

[2]International Atomic Energy Agency, "GOV/2003/40 - Implementation of the NPT safeguards agreement in the Islamic Republic of Iran." Last modified 6 June 2003, <http://www.iaea.org/Publications/Documents/Board/2003/gov2003–40.pdf>.

Shadow Measurement Error

The first relates to foreshortening that may distort measurements of ground objects in a georeferenced image. A satellite need not be directly overhead to view a location; many objects may be viewed from an angle resulting in skewed measurements of horizontal dimensions due to linear perspective. One may minimize such errors by relying as much as possible on images captured from a nearly directly overhead view when taking horizontal measurements for area calculations. To obtain the most precise area measurements, images must be orthorectified to achieve a true overhead view.

A second source of error involves the possibility of slanted walls. Height estimates rely on right triangle calculations. The Khushab reactors have been viewed from enough angles to be reasonably sure that all key structures possess vertical walls. For sites with less abundant imagery, however, the probability of such an error increases. This is an important concern for reactors with crossflow cooling towers, because many crossflow cooling towers possess slanted walls for the ideal fill arrangement.

A third possible source of error involves skewing of shadow measurements due to ground sloping. The Khushab site is located on fairly level ground according to Google Earth terrain data. For other sites located in more hilly areas, especially military suites nestled in valleys or set snug against hillsides, terrain corrections must be made to accurately use shadow measurements.

Another final source of error related to shadow measurements involves an "ideal time window" during which visible shadows are likely to most accurately reflect upon the height of the object that is casting it. While the bounds on this window were not examined in detail in the scope of this study, general principles to minimize such errors include awareness of sun altitude and shadow pixilation errors. Sun altitude error is most greatly apparent in the very long shadows cast in either early morning or late afternoon. This is because the longest edge of the shadow is cast by the lower limb of the sun despite the fact that sun altitude values are provided for the center of the sun. This error is maximized when the sun is lowest in the sky.[24] Conversely, shadow pixilation error (or the error associated with the imperfect resolution of satellite images) is maximized when the sun is nearly overhead as each pixel accounts for a greater percentage of the shadow. Given these bounding principles, shadow measurements in this study were conducted either in the mid-morning or mid-afternoon to minimize both errors to the greatest extent.

Cooling System Type Uncertainty

A more fundamental uncertainty is whether the visible cooling towers are the only means of heat exchange. This article assumes that the Khushab reactors are relying solely on cooling from their mechanical draft cooling towers. Another possibility which could allow the reactors to possess significantly

greater thermal capacities is if the nearby Chashma-Jhelum link canal is also being utilized in an additional once-through cooling system.

A significant argument against the possible use of the canal for cooling is the apparent lack of structures that are typical of a once-through cooling system. Namely, these structures include a water intake structure to draw in water from the water body, a water treatment site or holding pond, and an outfall structure which discharges heated water back into the water body. The nearby Chashma Nuclear Power Plant utilizes a once-through cooling system, and these characteristic structures are all clearly visible. The plant's cooling system draws in water from a large intake structure located directly on the Chashma-Jhelum link canal, pools the water in a treatment site, and after the water is used to cool the reactors, it is discharged through an outfall structure into a small channel that runs for about 3 km before joining the Indus River (Figure 10). The Chashma plant also utilizes mechanical draft cooling towers, however, these are held in reserve and intended to be used only for emergencies.[25] Notably, these cooling towers are smaller than the cooling towers at Khushab despite Chashma's significantly greater thermal capacity.[26] This supports the notion that Khushab is more likely entirely cooled by its mechanical draft cooling towers.

Looking at Khushab, there is no obvious water intake structure at the site. Such a structure would possess the screening systems to filter incoming water and provide housing for the intake piping systems. While it is not essential that the intake structure be located on or near the water body (since pipes can

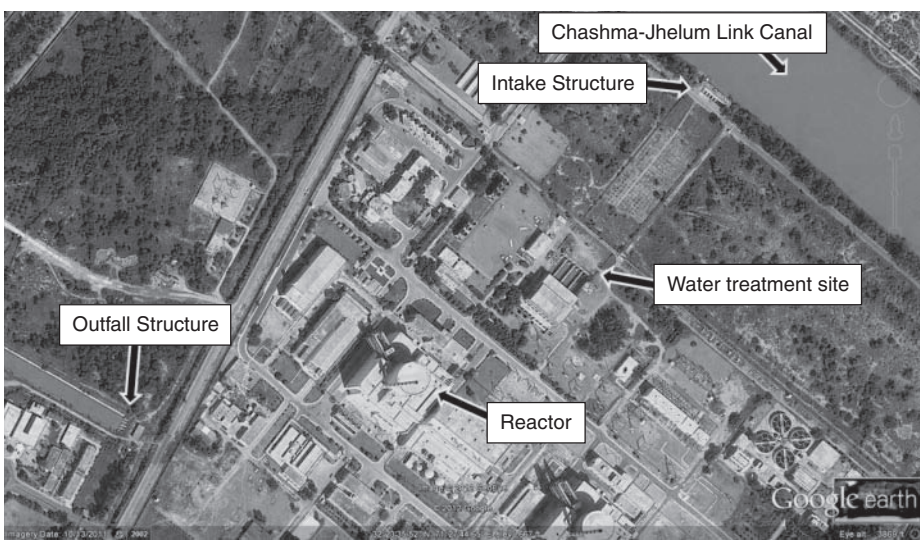

Figure 10: A GeoEye satellite image of the Chashma nuclear reactor, featuring intake and outfall structures characteristic of a once-through cooling system. Image captured on 13 October 2011.

be run underground), this would make the most sense from a structural and maintenance standpoint, especially since screening systems and pipes have to be frequently maintained.[27]

In the absence of an intake structure near the canal, once-through cooling systems based on a river would typically have a holding pond where the river water would be channeled in order to be filtered, treated and pumped through the reactors.[28] Again, no such structures are visible at the Khushab site.

There is also no obvious outfall structure for discharging heated water back into the river (which would have to be located east or downstream of any intake structure).

Although thermal imagery would be the most reliable way to determine the presence or absence of heated water discharge, it is likely that the water disturbance alone would still be visible with simple high-resolution satellite imagery. One reason for this is that water in the canal is relatively murky, and water being expelled from the reactor cooling systems would be clean, indicating the possibility of a visible color change. A second reason is because if water is discharged too far below the water body surface, surrounding pressure from the water body may decrease the effectiveness and reliability of the discharge pumps.[29] The Chashma outfall structure shows water being discharged clearly above the river surface. Therefore, if the Khushab reactors relied on once-through cooling, it is likely we would be able to see some kind of water color change or surface disturbance in addition to an outfall structure, especially with the increasing number of reactors at the site.

In sum, there are several factors that make it very unlikely that the canal is currently being used to cool the Khushab reactors, though the possibility of such a system being developed in the future should not be entirely discounted.

Plutonium Production Analysis

The estimates of thermal capacity based on the horizontal area approach allow an estimate of Pakistan's plutonium production. Khushab I is estimated to have begun producing plutonium around 2000, and Khushab II may have become operational towards the end of 2010.[30] In typical heavy water reactors operating at a burnup of 1000 MWd/t (which is typical for producing weapons grade plutonium), the spent fuel contains approximately 0.9 kg of plutonium per ton of spent fuel.[31]

Table 9 shows plutonium production estimates of the Khushab fleet of reactors. The thermal capacity estimates were obtained by averaging the range provided by the horizontal area approach estimate in Table 2. The plutonium production estimates reflect a reactor operating at 70% capacity, held to be typical for weapon-grade plutonium production reactors.[32] As of 2011, this number reaches 173 kg, or enough fissile material for 22 simple fission warheads, assuming 8 kg per warhead as an IAEA significant quantity.[33] However, press

Table 9: Plutonium production estimates of the Khushab fleet of reactors

Reactor	Thermal capacity estimate (MWt)	Thermal power at 70% capacity factor (MWt)	Pu production per year (kg)	Total produced as of end of 2011 (kg)
Khushab I	49	34	11	143[1]
Khushab II	66	46	15	30[2]
Khushab III	81	57	19	~
Khushab IV	~	~	~	~

[1]Refers to total possible production if operating at 70 percent efficiency since 1998, as mentioned in IPFM Global Fissile Material Report 2011, p. 19.
[2]Refers to total possible production if operating at 70 percent efficiency since late 2009 or early 2010 as mentioned in IPFM Global Fissile Material Report 2011, p. 19.

reports claim Pakistan has attempted to reduce the amount of fissile material for each nuclear warhead, and Table 10 provides a range of warhead estimates, based on different assumptions about the amount of plutonium in each Pakistani nuclear weapon. If Khushab IV has at least an equivalent thermal capacity as Khushab III, the entire complex could be capable of producing 64 kg of plutonium per year or enough fissile material for anywhere from 8–21 new warheads per year depending on their design.

It is important to recognize, however, that these estimates will all be influenced by the duration of operation of each reactor, and the numbers assume that Khushab I has operated continuously since 1998. Production estimates could be diminished by the time spent offline for each reactor needed for refueling or maintenance. Such exact operational duration is difficult to ascertain from panchromatic satellite imagery, as the absence of visible plumes emitting from the cooling towers could possibly be attributed to the installation of

Table 10: Warhead production estimates from Khushab plutonium

	IAEA significant quantity (8 kg)	1st-generation implosion-type warhead (5–6 kg)[1]	2nd-generation warhead (4–5 kg)[2]	Two-stage warhead (3–4 kg)[3]
Past production: Estimated Pu stockpile (173 kg)[4]	22 warheads	29–35 warheads	35–43 warheads	43–58 warheads
Future production: Khushab annual Pu production capacity (64 kg/year)[5]	8 warheads/year	11–13 warheads/year	13–16 warheads/year	16–21 warheads/year

[1]International Panel on Fissile Materials, "Global Fissile Material Report 2011."
[2]*Ibid.*
[3]*Ibid.*
[4]Refers to plutonium production estimate obtained through use of horizontal area approach as of early 2011.
[5]Refers to plutonium production capacity upon completion of the fourth reactor if the reactor is at least equivalent of the thermal capacity of Khushab III.

plume abatement systems, which eliminate plume visibility even when the reactor is operational. More precise estimates could possibly be achieved through examination of thermal imagery using methods similar to those used in studies examining visible plumes and roof heat via Landsat 5 and Landsat 7 thermal imagery.[34]

CONCLUSIONS

Three dimensional data are shown to be useful in furthering the use of satellite imagery and 2D methods such as the horizontal area approach. Three-dimensional data and models can help assess the applicability of the horizontal area approach by revealing information about configuration and fill type, although this is difficult to systematize given the wide variety of factors that can influence the height of a cooling tower. A general approximation is that for *research-type reactors*, cooling towers with crossflow configuration and/or film fill may be relatively shorter, whereas counterflow and/or splash fill towers may be relatively taller. Piping configuration and tower height are important factors that can aid in characterizing the cooling towers as either counterflow or crossflow, and fan size can be a rough indicator of whether the reactor is of low or high power.

The horizontal area approach is likely to perform well with Khushab II and III given their fill type and configuration, and is also applicable to Khushab I given the tower's probable fill type and proportions. The horizontal area approach narrows the possible capacity range for the Khushab reactors to about 40–90 MWt. This is not a drastically new estimate, but it does decisively eliminate earlier estimates suggesting that Khushab II could be as large as 1000 MWt.

The techniques used here appear broadly applicable. In particular, the horizontal area approach would appear to be useful for most reactors used in weapons programs or suspected weapons programs, given the preponderance of research-type reactors of counterflow configuration and film fill type. These novel 3D tools and methods offer analysts operating on a completely unclassified basis the ability to perform analyses that can improve the scope and depth of open source geospatial analysis for international security.

NOTES AND REFERENCES

1. See for example J. T. Richelson, *Spying on the Bomb: American Nuclear Intelligence from Nazi Germany to Iran and North Korea* (New York: Norton, 2006); and B. Jasani, I. Niemayer, S. Nusbaum, B. Richter, and G. Stein, eds., *International Safeguards and Satellite Imagery: Key Features of the Nuclear Fuel Cycle and Computer-Based Analysis* (New York: Springer, 2009).

2. See section on "Error Analysis" for a description of where and when this method is most effective.

3. Central Intelligence Agency, "Pakistan: A New Reactor Under Construction." Released September 1999; Central Intelligence Agency, "Pakistan's Nuclear Weapons Program: Personnel and Organizations." Released September 1999.

4. First Atomic Energy of Canada Limited, *Canada Enters the Nuclear Age: A Technical History of Atomic Energy of Canada Limited as Seen from Its Research Laboratories* (Montreal: McGill-Queen's Press, 1997): 118, 53.

5. On Taiwan, see: Central Intelligence Agency, "Special National Intelligence Estimate: Taipei's Capabilities and Intentions Regarding Nuclear Weapons Development." Last modified December 2001, http://www.gwu.edu/~nsarchiv/nukevault/ebb221/T-1a.pdf. On India, see: Ruth Fawcett, *Nuclear pursuits: The Scientific Biography of Wilfrid Bennett Lewis* (Montreal: McGill-Queen's Press, 1994): 113.

6. National Foreign Assessment Center, "South Korea Nuclear Development and Strategic Decision Making." Last modified June 1978, <http://www.foia.cia.gov/docs/DOC_0001254259/DOC_0001254259.pdf>.

7. D. Albright, and P. Brannan. Institute for Science and International Security, "Commercial Satellite Imagery Suggests Pakistan is Building a Second, Much Larger Plutonium Production Reactor," (4 July 2006), <http://www.isis-online.org/publications/southasia/newkhushab.pdf>.

8. T. Cochran, Natural Resources Defense Council, "What is the Size of Khushab II?" (8 September 2006), <http://docs.nrdc.org/nuclear/files/nuc_06090801A.pdf>.

9. D. Albright, and P. Brannan, Institute for Science and International Security, "Second Khushab Plutonium Production Reactor Nears Completion." (18 September 2008), <http://www.isis-online.org/publications/southasia/Khushab_18September2008.pdf>.

10. T. Cochran, Natural Resources Defense Council, "What is the Size of Khushab II?" (8 September 2006), <http://docs.nrdc.org/nuclear/files/nuc_06090801A.pdf>.

11. L. D. Berman, *Evaporative Cooling of Circulating Water* (Pergamon Press, 1961): 263.

12. SPX Cooling Technologies, "Marley Class W400 Cooling Tower: Product Specifications," <http://spxcooling.com/pdf/SPEC 400-10A.pdf>, 14.

13. J. Hensley, *Cooling Tower Fundamentals*, (Overland Park: SPX Cooling Technologies, Inc., 2009), <http://spxcooling.com/pdf/Cooling-Tower-Fundamentals.pdf>, 10.

14. *Ibid.*

15. *Ibid*.

16. L. D. Berman, *op. cit.*, 229.

17. Definitions—Range: difference between the hot water temperature and the cold water temperature. Approach: difference between the cold water temperature and wet-bulb temperature. Wet bulb temperature: the temperature of the entering or ambient air.

18. Marley by SPX Cooling Technologies, "Cooling Tower Information Index." <http://spxcooling.com/pdf/CTII-1.pdf>.

19. State of California, Ocean Protection Council, "Closed-Cycle Cooling Systems." <http://www.opc.ca.gov/webmaster/ftp/project_pages/OTC/engineering study/Chapter_4_Closed_Cycle_Cooling.pdf>.

20. J. S. Roy, United States Department of State, "Memorandum for Mr. William F. Sittmann; The White House; Subject: Algerian Nuclear Program." Last modified 20 April 2004, <http://www.gwu.edu/~nsarchiv/nukevault/ebb228/Algeria-5b.pdf>. See also: Mark Hibbs, "Cooling Towers are Key to Claim Algeria is Building Bomb Reactor," *Nucleonics Week*, 18 April 1991.

21. United States Department of State, "Casey Hearings; Senator Biden Question: Nuclear Reactor Issue." Last modified 20 April 2004, <http://www.gwu.edu/~nsarchiv/nukevault/ebb228/Algeria-17b.pdf>.

22. J. Hensley, *op.cit*, 10.

23. L. D. Berman, *op. cit.*

24. N. Bowditch, *The American Practical Navigator* (Paradise Cay Publications, 2011): 380.

25. Z. Mian. Princeton University, Center for Environmental and Energy Studies, "Pakistan's Chashma Nuclear Power Plant: A Preliminary Study of Some Safety Issues and Estimates of the Consequences of a Severe Accident." December 1999. <http://www.princeton.edu/sgs/publications/center-reports/CEES-321 revised.pdf>. See p. 16.

26. The horizontal surface area of a Chashma cooling tower is about 408 square meters, whereas Khushab I's cooling tower is 464 square meters.

27. L. Drbal, P. Boston, and K. Westra, *Power Plant Engineering* (Springer, 1995): 359.

28. H. Zhang, and F. von Hippel, "Using Commercial Imaging Satellites to Detect the Operation of Plutonium- Production Reactors and Gaseous-Diffusion Plants," *Science and Global Security*, 8(2000): 239, <http://www.princeton.edu/sgs/publications/Using-Commercial-Imaging-Satelites.pdf>.

29. L. Drbal, P. Boston, and K. Westra, *op. cit.*, 360.

30. P. Brannan, Institute for Science and International Security, "Steam Emitted From Second Khushab Reactor Cooling Towers; Pakistan May Be Operating Second Reactor." Last modified 24 March 2010, <http://isis-online.org/isis-reports/detail/steam-emitted-from-second-khushab-reactor-cooling-towers-pakistan-may-be-op/12>.

31. Z. Mian, A. H. Nayyar, and R. Rajaraman, "Exploring Uranium Resource Constraints on Fissile Material Production in Pakistan," *Science and Global Security*, 17(2009): 85.

32. *Ibid*. 84

33. *IAEA Safeguards Glossary 2001 Edition*, International Nuclear Verification Series No. 3, (Austria: International Atomic Energy Agency, 2002) <http://www-pub.iaea.org/MTCD/publications/PDF/nvs-3-cd/PDF/NVS3_prn.pdf>, 23.

34. A. Bernstein, "Monitoring Large Enrichment Plants Using Thermal Imagery from Commercial Satellites: A Case Study," *Science and Global Security* 9(2001): 143–163.